Pressure regulator | M5

Image shows:
9.15M5.00.001

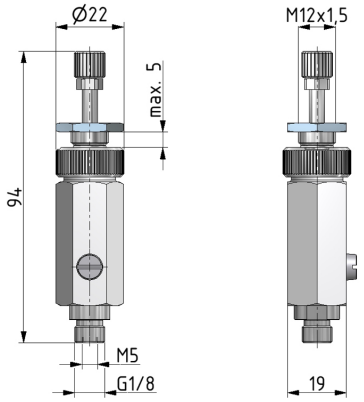

Image shows:
9.15M5.00.001

flow characteristic

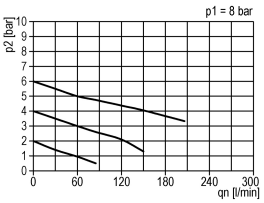

pressure characteristic

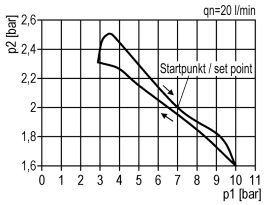

symbol

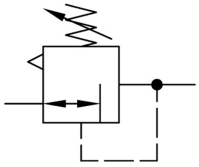

technical data

- **description:** plunger regulator with diaphragm and relieving feature
- **medium:** compressed air, neutral gases
- **supply pressure P1 max.:** 16 bar
- **temperature range:** -10°C - +60°C
- **control panel nut:** control panel nut

accessories

type	part-number	description
DR.M5 S	9.15M5.00.001	Pressure regulator M5 0-8,5 with panel mounting ring