SOLUTIONS FOR INDUSTRIAL AUTOMATION

ANGULAR GRIPPERS

SERIES 8400, 190, 8600 3 JAW, & 5300

INDEX:

SERIES 190

SERIES 8400

SERIES 8600
3 JAW

SERIES 5300

6C

ORDERING DATA: SERIES 8400 ANGULAR GRIPPERS

TO ORDER SPECIFY:
Model, Design No., Options, and Seals.

DESIGN NO. — OPTIONS

8410 - 02 - 0 0 1

MODEL
8400 - .375 Size
8410 - .500 Size
8420 - .750 Size
8430 - 1.000 Size

OPTIONS
0 - Hall Sensor Ready without sensor
3 - Hall Sensor (See note 1.)
5 - Proximity Switch Ready
(Not available for Model 8400)

SEALS
1 - Buna-N
2 - Fluoro-Elastomer

PROXIMITY SWITCHES

PART NO.	DESCRIPTION
18430-001-02	4 mm Round Current Sinking (NPN)
18430-002-02	4 mm Round Current Sourcing (PNP)

PROXIMITY SWITCH KIT

TO FIT:	KIT NO.
8410	19813
8420	19814
8430	19631

See page 6C-5 for details.

FINGER BLANK KITS

TO FIT:	ALUMINUM	DELRIN AF
8400	8573	8574
8410	8575	8576
8420	8577	8578
8430	18613	18614

HALL SENSOR KITS

GRIPPER	SENSOR KIT NUMBER
8400	10906-012
8410	10907-012
8420	10908-012
8430	18686-04

NOTES:
1) Sensor must be used with a PHD Set Point Module which is ordered separately. See Switches and Sensors section for information and ordering data.
2) Proximity Switches, Bracket Kits, and Finger Blanks must be ordered separately. See page 6C-5.

CUSTOM PRODUCTS FIT TO NEED

CUSTOM GRIPPERS ARE AVAILABLE. PLEASE CONSULT PHD.

BENEFITS: SERIES 8400 ANGULAR GRIPPERS

OPERATING PRINCIPLE

A double-acting piston is attached to a central pivot by a connecting rod. Each jaw has a pivot pin inserted through the central pivot as well as a hinge pin inserted into the gripper body.

As air pressure is applied to either end of the piston, the jaw is forced to rotate about the hinge pin by the central pivot and pin. This rotation provides the opening and closing of the jaws.

BENEFITS

- Compact size is ideal for handling small parts in confined areas.
- Double-acting for either internal or external gripper applications.
- Rugged jaw and body construction can withstand high impact and shock loads.
- Available in four sizes to cover a wide range of application requirements.
- Hardened steel pivot mechanism provides long life beyond 5 million trouble-free cycles.
- Close tolerance jaw mechanism eliminates jaw play and dowel holes precisely position customer tooling.
- The gripper body has three mounting surfaces with dowel holes providing accurate mounting in a variety of attitudes.
- Simple construction allows the grippers to be easily repaired in the field.
- Available with Hall Effect Sensor for indication of jaw position and interfacing with various controllers and logic systems.
- Available with blank fingers for custom fitting of fingers to the part's shape.
- Available with proximity switches for indication of jaw position and interfacing with various controllers and logic systems.

SPECIFICATIONS	SERIES 8400
WORKING PRESSURE	40 psi Min. - 150 psi Air Max.
BODY	Hardcoated Aluminum
PIVOT COMPONENTS	Alloy Steel
JAWS	Steel
ROD BUSHINGS	Delrin AF
SEALS	Quad Type Piston and Rod
LUBRICATION	Permanent for Non-Lube Air
PORTS	Straight Thread
OPTIONS	Hall Sensor, Proximity Switches

DIMENSIONS: SERIES 8400 ANGULAR GRIPPERS

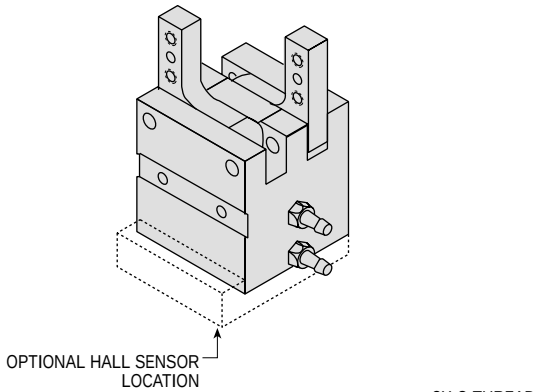

LETTER DIM	MODEL NUMBER 8400	8410	8420	8430
B	.700	.900	1.400	1.938
C	.196	.255	.316	.490
D	.125	.187	.250	.315
E	.250	.340	.540	.750
F	.230	.312	.440	.625
G	3-48	4-40	6-32	8-32
H	.270	.340	.540	.750
J	.080	.110	.160	.219
K	.570	.735	1.070	1.415
L	.098	.110	.150	.217
M	.400	.480	.650	.869
N*	.1870	.2500	.3750	.7000
O	.156	.175	.250	.275
P	.500	.600	.875	1.250
Q	4-40 x .156 DP	6-32x .187 DP	8-32 x .281 DP	10-24 x .375 DP
R	.966	1.219	1.480	2.054
S	.094	.156	.180	.256
T	.250	.343	.500	.688
U*	.5000	.6875	1.0000	1.3750
W	1/16	3/32	1/8	5/32
Y	.196	.220	.300	.433
Z	.093	.125	.187	.350
AA	.220	.290	.440	.562
BB	3-56	10-32	10-32	1/8 NPT
CC	.120	.145	.160	.364
DD	.300	.410	.500	.720
EE	.100	.140	.220	.360
FF	1/16	3/32	1/8	1/8

*TOLERANCE IS ± .0008

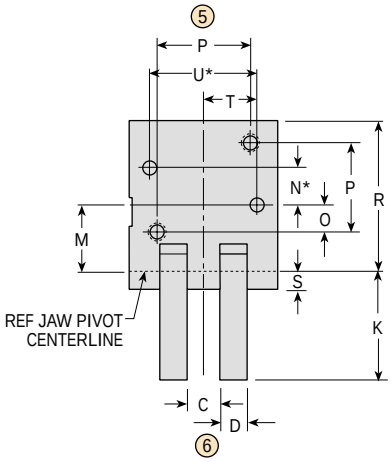

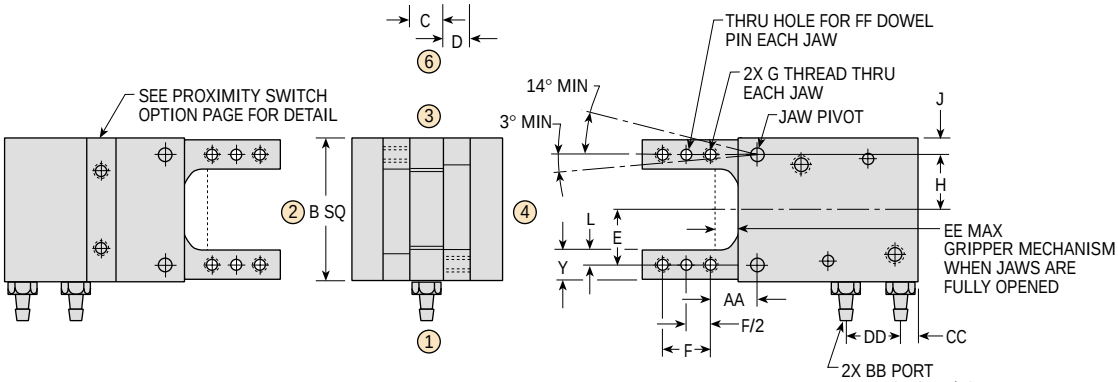

GRIPPER JAWS: SHOWN AT PARALLEL POSITION

JAW MOVEMENT SHOWS MINIMUM AMOUNT OF JAW ROTATION. JAWS MAY OPEN 3° OR CLOSE 5° BEYOND STATED MINIMUM ROTATION.

FINGER BLANKS

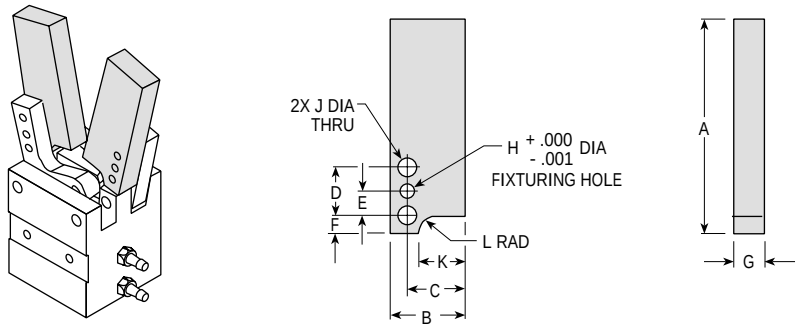

LETTER DIM	MODEL NUMBER 8400	8410	8420	8430
A	1.000	1.500	2.000	2.500
B	.340	.440	.690	.939
C	.240	.330	.530	.739
D	.230	.312	.440	.625
E	.115	.156	.220	.313
F	.095	.110	.170	.200
G	.187	.250	.312	.500
H	.0620	.0937	.1245	.1240
J	.109	.129	.162	.180
K	.180	.250	.420	.520
L	.094	.094	.156	.234

FINGER MATERIAL	FINGER BLANK KIT NO			
ALUMINUM	8573	8575	8577	18613
DELRIN AF	8574	8576	8578	18614

FINGER BLANK KITS: CONTAIN 2 FINGER BLANKS, 4 MTG SCREWS, & 2 DOWEL PINS
FINGERS MAY ALS0 BE MOUNTED FACING OUTWARD

3 SENSOR/TRANSDUCER

PHD offers a solid-state sensor transducer option -3 for use with a Set Point Module for sensing four or more positions throughout the jaw travel. The Set Point Module is ordered separately and allows independent adjustment of each sensing position and is available for 4.5 to 24 VDC NPN or PNP.

PART NO.	DESCRIPTION
9800-01-0300	4.5-24 VDC, Sink Type Output
9800-01-0400	4.5-24 VDC, Source Type Output

See Switches and Sensors section for information.

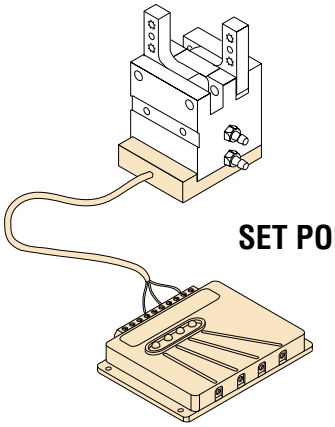

SET POINT MODULE

5 PROXIMITY SWITCH READY

Provides unit ready for installation of kits for proximity switch mounting.

PROXIMITY SWITCHES

PART NO.	DESCRIPTION
18430-001-02	4 mm ROUND CURRENT SINKING (NPN)
18430-002-02	4 mm ROUND CURRENT SOURCING (PNP)

SEE SWITCHES AND SENSORS SECTION FOR DETAILS.

GRIPPER	KIT	LETTER DIMENSION A	B	C
8410	19813	.594	.374	.223
8420	19814	.594	.770	.223
8430	19631	.594	1.190	.286

EACH PROXIMITY SWITCH KIT CONTAINS THE FOLLOWING ITEMS:
1 TARGET WITH SCREW
1 SWITCH BRACKET WITH SCREW

PROXIMITY SWITCHES ARE ORDERED SEPARATELY.

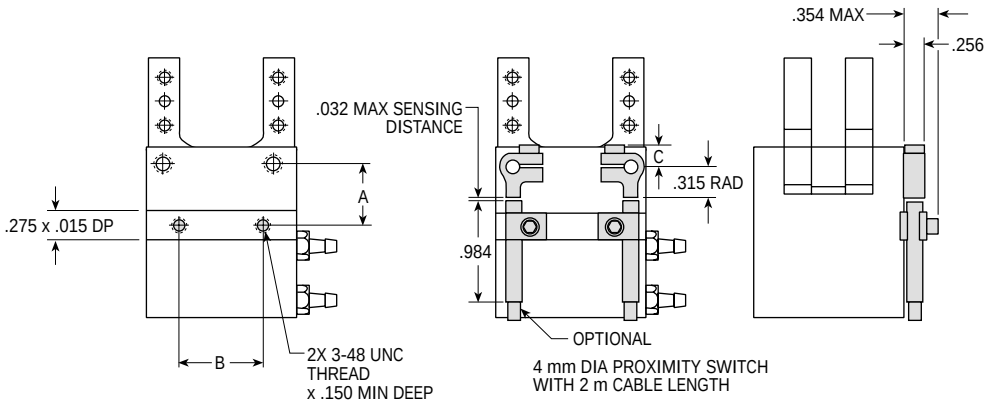

SLOT DETAIL FOR SWITCH BRACKET

SPECIFICATIONS

GRIPPER NO.	DISPLACEMENT in^3	UNIT WEIGHT oz	G_F EXTERNAL GRIP	G_F INTERNAL GRIP
8400	.013	.9	.027	.032
8410	.036	2.3	.068	.092
8420	.110	6.2	.252	.306
8430	.30	17.0	.576	.774

NOTE: Maximum load that grippers can handle will vary based on: size of part being picked up, shape of part, texture of part, speed at which part is transferred, working pressure, shape of finger pads, etc. PHD recommends that the fingers or jaws be tooled or machined to conform to the shape of the part being gripped.

$$\frac{\text{PRESSURE (psi)} \times G_F}{\text{DISTANCE FROM JAW PIVOT (in)}} = \text{FORCE (lb)}$$

NOTE: Gripping force is defined as the maximum value at which the jaws will not move from their gripping position. The above figures are based on calculations and will vary slightly due to friction. Gripping force is proportional to input pressure.

SEALS AND FLUIDS

Buna-N seals are standard on all Series 8400 Grippers. Piston and rod seals are quad type seals. These seals are compatible with standard paraffin-base hydraulic fluids used for lubrication of air cylinders. Fluoro-Elastomer seals in place of Buna-N are optional for special applications. Consult PHD for high temperature use.

TEMPERATURE LIMITS

Seals and gripping mechanism are designed for use in temperatures from –20° to 180°F.

BACKLASH

Backlash of each angular gripper jaw will be less than 1°. Sideplay will be less than .005.

LIFE EXPECTANCY

All units have been tested to 5 million cycles with minimum seal wear and minimum backlash.

LUBRICATION

Piston and rod as well as gripping mechanism are prelubricated at the factory for service under normal conditions.

MATERIAL

Angular gripper body is made of hardcoated aluminum. Jaws are steel. The optional finger blanks are anodized aluminum or Delrin AF. All central pivot components are alloy steel.

SPECIAL UNITS

For grippers for special applications, severe duty or special material, consult PHD.

NOTES

ORDERING DATA: SERIES 190 ANGULAR GRIPPERS

TO ORDER SPECIFY:
Model, Design No., Sensor or Switch Options, Spring Options, and Seals.

SPRING OPTIONS
0 - None
1 - Spring close (Single acting only)
2 - Spring open
(Can be used as double acting)
Options -1 and -2 not available on Model 19002

DESIGN NO. | OPTIONS

19002 - 5 - 4 0 0 2

MODEL NO.	BORE in	BORE mm
19002	.343	9
19012	.500	12.5
19022	.750	20
19032	1.00	25

SENSOR OR SWITCH OPTIONS
4 - Hall Effect Sensor Ready (See note 1.)
(Not available with spring option)
5 - Proximity Switch Ready
(4 mm round switches)

SEALS
2 - Fluoro-Elastomer

FINGER KITS

MODEL NO.	PART NO.
19002	18070
19012	18071
19022	18072
19032	18073

PROXIMITY SWITCH BRACKET & TARGET KITS

MODEL NO.	PART NO.
19002	18074
19012	18090
19022	18075
19032	18091

Includes one each: target, bracket, and screw

PROXIMITY SWITCHES

PART NO.	DESCRIPTION
18430-001-02	4 mm Round Current Sinking (NPN)
18430-002-02	4 mm Round Current Sourcing (PNP)

See Switches and Sensors section for details.

HALL EFFECT SENSOR KITS

MODEL NO.	PART NO.
19002	18057-04
19012	18058-04
19022	18059-04
19032	18060-04

Not available with spring option.

NOTES:
1) Hall Sensor must be used with a PHD Set Point Module which is ordered separately. See Switches and Sensors section for information and ordering data.
2) Proximity switches, bracket kits, and finger kits must be ordered separately.

CUSTOM PRODUCTS FIT TO NEED

CUSTOM GRIPPERS ARE AVAILABLE. PLEASE CONSULT PHD.

BENEFITS: SERIES 190 ANGULAR GRIPPERS

BENEFITS

- Compact size for handling small parts in confined areas.
- Double acting for either internal or external gripper applications.
- Rugged jaw and body construction to withstand high impact and shock loads.
- Available in four sizes to cover a wide range of application requirements.
- Hardened steel pivot mechanism for long life beyond 10 million trouble-free cycles.
- Close tolerance jaw mechanism minimizes jaw play and dowel pin holes allow precise positioning of tooling.
- The gripper body has three mounting surfaces with dowel pin holes providing accurate mounting in a variety of attitudes.
- Simple construction allows the grippers to be easily repaired in the field.
- Available with a PHD Hall Effect Sensor or with PHD Hall Effect Proximity Switches for indication of jaw position and interfacing with various controllers and logic systems.
- Available with finger blanks for machining to suit specific applications.

SPECIFICATIONS	SERIES 190
MINIMUM PRESSURE	30 psi [2 bar]
MAX. PRESSURE	150 psi [10 bar]
JAWS	Steel
BODY	Hardcoated Aluminum
ROD BEARING	Delrin AF
SEALS	Quad Type
LUBRICATION	Permanent for Dry Air
PORTS	Straight Thread
OPTIONS	Proximity Switches, Hall Sensor, Finger Blanks

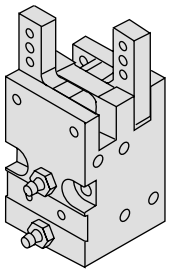

LETTER DIM.	MODEL NO. 19002	19012	19022	19032
B	20.0	26.0	38.0	50.0
C	5.0	6.5	8.0	12.0
D	3.5	5.0	6.5	8.0
E	7.0	9.0	14.0	19.5
F	6.0	8.0	12.0	16.0
G	M2.5 x 0.45	M3 x 0.5	M4 x 0.7	M5 x 0.8
H	13.5	17.0	24.0	26.5
K	16.0	19.5	28.0	36.0
L	3.0	3.5	4.5	5.5
M	6.5	8.0	13.0	12.5
O*	14.0	18.0	22.0	28.0
P*	14.0	18.0	28.0	39.0
Q	M3 x 0.5 x 4.5 mm	M3 x 0.5 x 4.5 mm	M4 x 0.7 x 6 mm	M5 x 0.8 x 7.5 mm
R	30.5	35.0	43.0	51.0
S	2.5	4.0	5.0	6.5
U	2.0	2.5	3.0	4.0
W	2.5	3.0	4.0	5.0
Y	6.0	7.0	9.0	11.0
Z	M3	M3	M4	M5
AA	10.0	12.0	17.0	22.9
BB	M3 x 0.5	M3 x 0.5	M5 x 0.8	M5 x 0.8
CC	3.5	3.5	4.5	5.0
DD	13.5	14.5	14.5	19.5
EE	4.6	4.6	7.0	10.0
FF	2.5	2.5	3.0	3.0

* TOLERANCE BETWEEN DOWEL PIN HOLES IS ±0.02

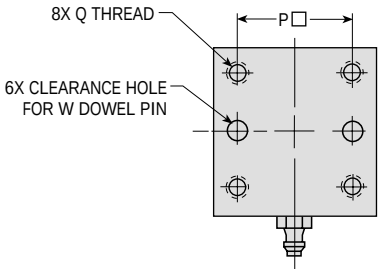

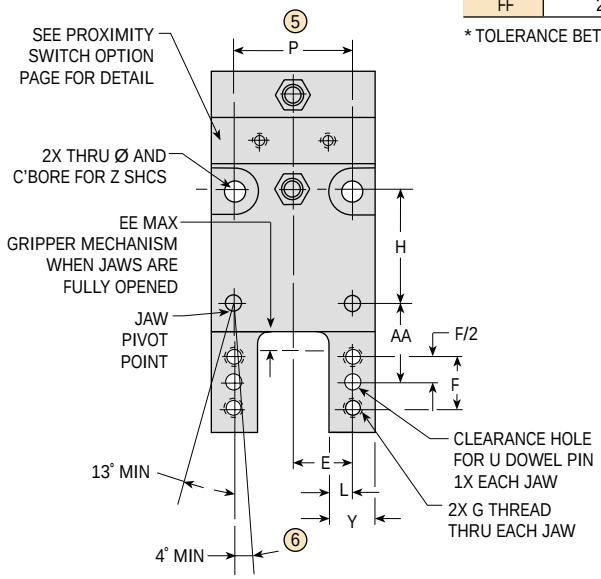

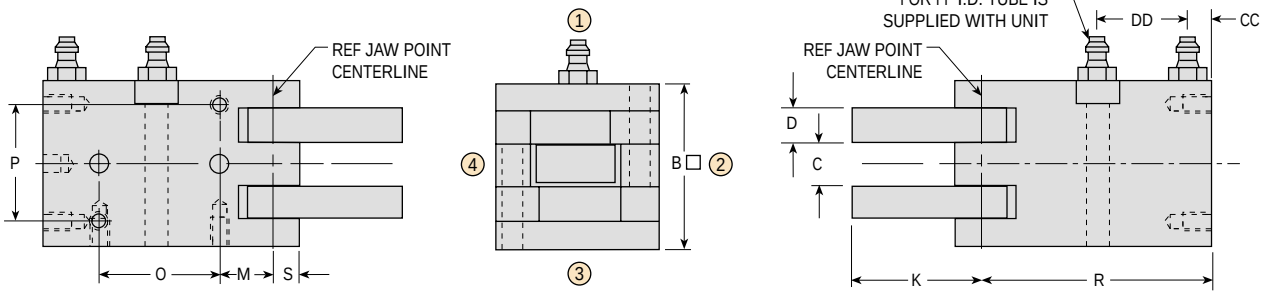

JAW MOVEMENT SHOWS MINIMUM AMOUNT OF JAW ROTATION. JAWS MAY OPEN 5° OR CLOSE 3° BEYOND STATED MINIMUM ROTATION.

4 HALL SENSOR READY

Provides unit installed with magnet for use with PHD Hall sensor.

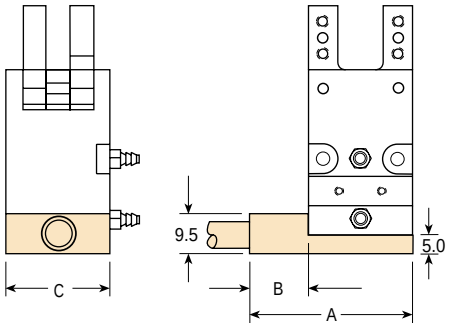

GRIPPER MODEL	KIT NO.	LETTER DIMENSION A	B	C
19002	18057-04	36.5	16.5	20.0
19012	18058-04	39.5	14.0	25.0
19022	18059-04	46.0	7.6	38.0
19032	18060-04	58.0	7.6	50.0

EACH HALL SENSOR KIT CONTAINS THE FOLLOWING ITEMS:
- 1 SENSOR WITH 4 m SHIELDED CABLE
- 4 SOCKET HEAD CAP SCREWS

SENSOR MAY BE ROTATED TO ALLOW CABLE TO EXTEND FROM ANY SIDE OF UNIT EXCEPT THE PORT SIDE.

5 PROXIMITY SWITCH READY

This option provides the gripper with an extended jaw pivot pin for use with a switch target. This pin and target are intended for use with a 4 mm round proximity switch with a 0.8 mm sensing range. Switches and Bracket and Target kits are ordered separately. See Switches and Sensors section for Proximity Switch details and additional information on switch bracket/target kits.

GRIPPER MODEL	KIT NO.	LETTER DIMENSION A	B	C
19002	18074	20.5	8.0	6.0
19012	18090	24.5	10.2	6.0
19022	18075	15.3	20.0	7.5
19032	18091	15.5	31.1	7.5

EACH PROXIMITY SWITCH KIT CONTAINS THE FOLLOWING ITEMS:
- 1 TARGET WITH SCREW
- 1 SWITCH BRACKET WITH SCREW

PROXIMITY SWITCHES ARE ORDERED SEPARATELY.

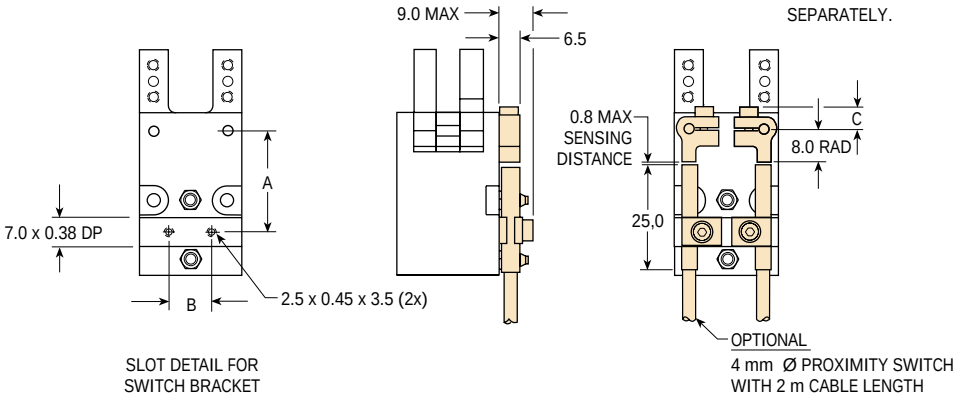

FINGER BLANKS

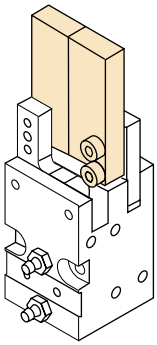

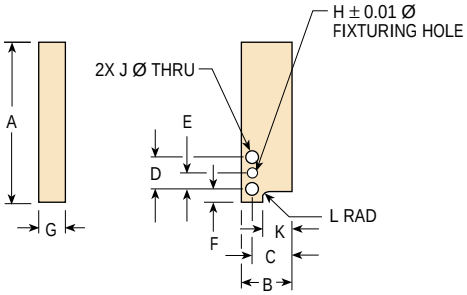

LETTER DIM.	MODEL NO. 19002	19012	19022	19032
A	24.5	38.0	51.0	63.5
B	9.5	12.0	18.0	25.0
C	6.5	9.0	14.0	19.5
D	6.0	8.0	12.0	16.0
E	3.0	4.0	6.0	8.0
F	3.0	3.0	4.0	5.0
G	5.0	6.5	8.0	12.0
H	1.97	2.47	2.97	3.97
J	2.9	3.4	4.5	5.6
K	4.5	7.0	11.0	14.0
L	3.0	3.0	4.0	5.0
	BLANK FINGER KITS			
KIT NO.	18070	18071	18072	18073

EACH FINGER KIT CONTAINS THE FOLLOWING ITEMS:
- 2 ALUMINUM FINGER BLANKS
- 4 SOCKET HEAD CAP SCREWS
- 2 DOWEL PINS

All dimensions are reference only unless specifically toleranced.

phd SOLUTIONS FOR INDUSTRIAL AUTOMATION
(800) 624-8511
www.phdinc.com/190a

SPECIFICATIONS

GRIPPER NO.	DISPLACEMENT cm^3	UNIT WEIGHT STANDARD g	UNIT WEIGHT SPRING ASSIST g	G_F EXTERNAL GRIP	G_F INTERNAL GRIP
19002	0.2	32	—	43	53
19012	0.6	82	86	115	153
19022	2.1	217	222	450	530
19032	4.9	475	485	942	1264

NOTE: Maximum load that grippers can handle will vary based on: Size of part being picked up, shape of part, texture of part, speed at which part is transferred, working pressure, shape of fingers, etc.

PHD recommends that the fingers of jaws be tooled or machined to conform to the shape of the part being gripped. However, if friction is the only means by which the part is being held, a minimum 4 to 1 gripping force to part weight ratio should be used.

$$\frac{\text{PRESSURE (kPa)} \times 0.01 \times G_F}{\text{DISTANCE FROM JAW PIVOT (mm)}} = \text{FORCE (N)}$$

$$\frac{\text{PRESSURE (bar)} \times G_F}{\text{DISTANCE FROM JAW PIVOT (mm)}} = \text{FORCE (N)}$$

SEALS AND FLUIDS

Fluoro-Elastomer seals are standard on all angular Series 190 Angular Grippers. Piston and rod seals are quad type seals and are compatible with standard paraffin-based lubrication oils used for pneumatic cylinders.

TEMPERATURE LIMITS

Seals and gripper mechanism are designed for use in temperatures from –20° to 180°F [–29° to 82°C].

LIFE EXPECTANCY

All units have been tested to 10 million cycles with minimal seal wear and minimal backlash.

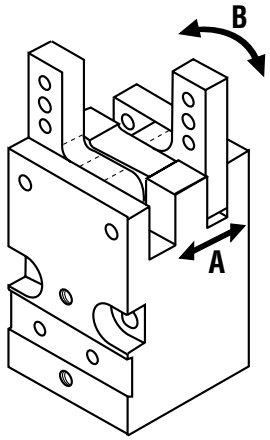

BACKLASH

Backlash (B) of each angular gripper jaw is less than 1 degree. Jaw side play (A) is less than 0.20 mm.

LUBRICATION

Piston, rod, and gripper mechanism are prelubricated at the factory for service under normal conditions.

MATERIAL

Angular gripper body is made of hardcoated aluminum. Jaws are steel with all central pivot components manufactured from alloy steel. Optional finger blanks are gold anodized aluminum.

SPECIAL UNITS

Grippers for special applications, severe duty, or constructed of special materials are available, consult PHD.

NOTES

ORDERING DATA: SERIES 8600 3 JAW GRIPPERS

TO ORDER SPECIFY:
Model, Design No., Options, and Seals.

8624 - 01 - 0 0 0 1

- **8624** — **IMPERIAL MODEL 3 JAW ANGULAR**
  - 8624 - Size 2
  - 8634 - Size 3
  - 8644 - Size 4
  - 8654 - Size 5
- **8624** — **METRIC MODEL 3 JAW ANGULAR**
  - 8625 - Size 2
  - 8635 - Size 3
  - 8645 - Size 4
  - 8655 - Size 5
- **01** — **DESIGN NO.**
- **0** — **OPTIONS**
  - 0 - None
  - 3 - Hall Sensor
  - 4 - Sensor Ready
- **0** — **OPTIONS**
- **1** — **SEALS**
  - 1 - Buna-N
  - 2 - Fluoro-Elastomer

NOTE: Sensor must be used with a PHD Set Point Module which is ordered separately. See Switches and Sensors section for information and ordering data.

SET POINT MODULE

PART NO.	DESCRIPTION
9800-01-0300	4.5-24 VDC, Sink Type Output
9800-01-0400	4.5-24 VDC, Source Type Output

See Switches and Sensors section for information.

CUSTOM GRIPPERS ARE AVAILABLE. PLEASE CONSULT PHD.

BENEFITS: SERIES 8600 3 JAW GRIPPERS

BENEFITS

- Double-acting for either internal or external gripper applications.
- Rugged jaw and body construction can withstand high impact and shock loads.
- Each available in four sizes to cover a wide range of application requirements.
- Close tolerance jaw mechanism minimizes jaw play.
- Mounting surfaces with dowel holes allow easy, accurate mounting in a variety of attitudes.
- Simple construction allows the grippers to be easily repaired in the field.
- Hardened steel pivot mechanism provides long life.
- Available with Hall Effect Sensor for indication of jaw position and interfacing with various controllers and logic systems.
- Designed for applications where gripper weight and size is critical.

SPECIFICATIONS	3 JAW
WORKING PRESSURE	20 psi Min. - 150 psi Max. Air [1.5 bar Min. - 10 bar Max. Air]
BODY	Hardcoated Aluminum
PIVOT COMPONENTS	Hardened Alloy Steel
JAWS	Black Anodized Aluminum
ROD BUSHINGS	Bronze
PISTON SEALS	Quad Type
ROD SEALS	Block Vee
LUBRICATION	Permanent for Non-Lube Air
PORTS	1/8 NPT [1/8 BSP]
OPTIONS	Hall Sensor

DIMENSIONS: SERIES 8600 3 JAW GRIPPERS

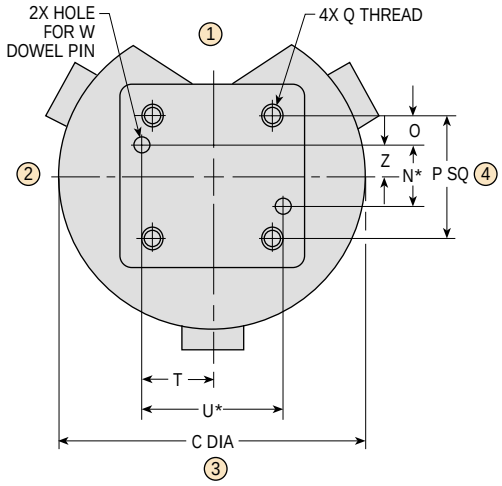

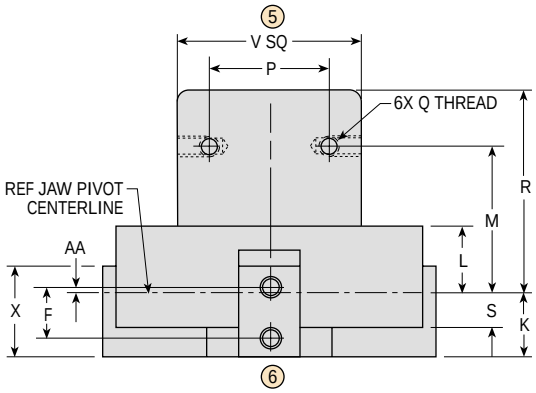

LETTER DIM	MODEL NUMBER 8624 in	8625 mm	8634 in	8635 mm	8644 in	8645 mm	8654 in	8655 mm
B	1.246	31.5	1.587	40.5	2.022	51.5	2.594	66.0
C	3.000	76.0	3.750	95.0	4.750	120.5	6.250	159.0
D	.500	13.0	.750	19.0	.875	22.0	1.000	25.5
E	.020	0.5	.231	6.0	.187	5.0	.063	1.5
F	.437	11.0	.625	16.0	.750	19.0	1.000	25.5
G	10-24 x .28 DP	M5 x 0.8 x 7.0 DP	1/4-20 x .38 DP	M6 x 1 x 9.5 DP	5/16-18 x .44 DP	M8 x 1.25 x 11.0 DP	3/8-16 x .56 DP	M10 x 1.5 x 14.0 DP
H	1.057	27.0	1.250	32.0	1.625	41.0	2.312	59.0
J	.550	14.0	.906	23.0	1.000	25.5	1.118	28.5
K	.640	16.5	.813	20.5	.968	24.5	1.200	30.5
L	.813	20.5	.816	21.0	.940	24.0	1.246	31.5
M	1.563	40.0	1.788	45.5	2.025	51.5	2.619	66.5
N*	.7000	17.78	.7500	19.05	1.1250	28.57	1.7500	44.45
O	.275	7.0	.375	9.5	.312	8.0	.500	13.0
P	1.250	31.5	1.500	38.0	1.750	44.5	2.750	70.0
Q	10-24 x .38 DP	M5 x 0.8 x 9.5 DP	1/4-20 x .38 DP	M6 x 1.0 x 9.5 DP	5/16-18 x .44 DP	M8 x 1.25 x 11.0 DP	3/8-16 x .56 DP	M10 x 1.50 x 14.0 DP
R	2.188	55.5	2.476	63.0	2.900	73.5	3.806	96.5
S	.307	8.0	.434	11.0	.560	14.0	.754	19.0
T	.687	17.5	.875	22.0	1.094	27.5	1.562	39.5
U*	1.3750	34.92	1.7500	44.45	2.1880	55.57	3.1250	79.37
V	1.750	44.5	2.250	57.0	2.750	70.0	4.000	101.5
W	5/32 x .187 DP	4.0 x 5.0	3/16 x .250 DP	5.0 x 6.5	1/4 x .250 DP	7.0 x 6.5	5/16 x .312 DP	8.0 x 8.0
X	.875	22.0	1.125	28.5	1.375	35.0	1.700	43.0
Y	1.188	30.0	1.500	38.0	1.875	47.5	2.430	62.0
Z	.350	8.5	.375	9.5	.562	14.0	.875	22.0
AA	.017	0.5	.062	1.5	.095	2.5	.150	4.0
CC	.375	9.5	.410	10.5	.440	11.0	.570	14.5
DD	.625	16.0	.690	17.5	.895	23.0	1.240	31.5

NOTES:
1) *TOLERANCE IS ±.0005 [±0.012]
2) NUMBERS IN [ ] ARE FOR METRIC UNITS AND ARE IN mm
3) CIRCLED NUMBERS INDICATE POSITION.

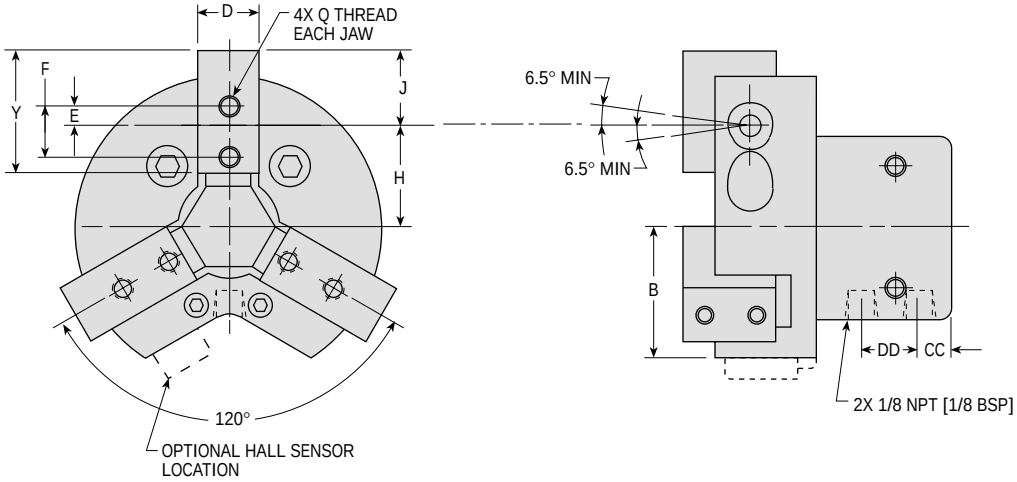

JAW MOVEMENT SHOWS MINIMUM AMOUNT OF JAW ROTATION. JAWS MAY OPEN 3° OR CLOSE 3° BEYOND STATED MINIMUM ROTATION.

All dimensions are reference only unless specifically toleranced.

SPECIFICATIONS

3 JAW GRIPPERS								
GRIPPER NO.	DISPLACEMENT		UNIT WEIGHT		G_F EXTERNAL GRIP		G_F INTERNAL GRIP	
	in³	cm³	lb	kg	IMPERIAL	METRIC	IMPERIAL	METRIC
862x	.170	2.79	1.43	0.65	.43	705	.59	941
863x	.415	6.80	2.74	1.24	1.18	1946	1.43	2346
864x	1.074	17.60	5.25	2.38	3.18	5221	3.69	6061
865x	3.286	53.86	9.90	4.49	10.07	16502	11.34	18581

NOTE: Maximum load that grippers can handle will vary based on: size of part being picked up, shape of part, texture of part, speed at which part is transferred, working pressure, shape of fingers, etc. PHD recommends that the fingers of jaws be tooled or machined to conform to the shape of the part being gripped.

$$\frac{\text{PRESSURE (psi)} \times G_F}{\text{DISTANCE FROM JAW PIVOT (in)}} = \text{FORCE (lb)}$$

$$\frac{\text{PRESSURE [bar]} \times G_F}{\text{DISTANCE FROM JAW PIVOT [mm]}} = \text{FORCE [N]}$$

NOTE: Gripping force is defined as the maximum value at which the jaws will not move from their gripping position. The above figures are based on actual measured results; figures may vary slightly due to friction. Gripping force is proportional to input pressure.

SEALS

Buna-N seals are standard on all 8600 angular gripper piston, rod, and bushing seals. Neoprene seals are used on the gripping mechanism. Rod seals are wear compensating block vee type and piston seals are quad type. These seals are compatible with standard paraffin-base hydraulic fluids used for lubrication of air cylinders. Fluoro-Elastomer seals in place of the Buna-N are optional for various types of hydraulic fluids. Consult PHD for high temperature use.

TEMPERATURE LIMITS

Seals and gripping mechanism are designed for use in temperatures from –20° to 180°F [–30° to 82°C]. Consult PHD for higher temperature requirements.

BACKLASH

Backlash of gripper jaw will be less than 0.2° initially, per jaw.

LIFE EXPECTANCY

Five million trouble-free cycles can be expected under normal working conditions. Life can be extended by relubricating ball and socket joint after five million cycles. Backlash after five million cycles should be no more than 1°.

LUBRICATION

Piston and rod as well as gripping mechanism are prelubricated for service under normal conditions and can be used for non-lube service. At five million cycles, gripper may be relubricated for extended life.

MATERIAL

Gripper body is made of hard coated aluminum. Jaw housings are anodized aluminum and the jaws are aluminum alloy. All internal jaw mechanisms are manufactured from alloy steel.

REPEATABILITY

Grip repeatability is within .002 [0.05 mm] of original centered position.

SPECIAL UNITS

For grippers for special applications, severe duty, or special material, consult PHD.

3 4 SENSOR/TRANSDUCER

PHD offers a solid-state sensor transducer option -3 along with a Set Point Module for sensing four or more positions throughout the jaw travel. The Set Point Module allows independent adjustment of each sensing position and is available for 4.5 to 24 VDC NPN or PNP.

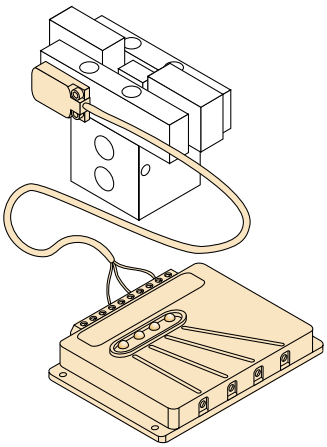

SET POINT MODULE

PART NO.	DESCRIPTION
9800-01-0300	4.5-24 VDC, Sink Type Output
9800-01-0400	4.5-24 VDC, Source Type Output

See Switches and Sensors section for information.

NOTES

ORDERING DATA: SERIES 5300 ANGULAR GRIPPERS

TO ORDER SPECIFY:
Model, Design No., Switches, Options, and Seals.

SENSORS & SWITCHES
0 - None
3 - Hall Sensor (See note 1.)
4 - Hall Sensor Ready
7 - Hall Effect Magnet on piston and "T" slot on body for Series 5360 Hall Switches

OPTIONS
0 - None
LIGHT SPRING FORCE
3 - Spring Close
4 - Spring Open
HEAVY SPRING FORCE
5 - Spring Close
6 - Spring Open

15321 - 1 - 3 0 0 2

IMPERIAL MODEL
JAW STYLE 1
15320 - Size 2
15330 - Size 3
15340 - Size 4
15350 - Size 5
JAW STYLE 2
15321 - Size 2
15331 - Size 3
15341 - Size 4
15351 - Size 5

METRIC MODEL
JAW STYLE 1
15322 - Size 2
15332 - Size 3
15342 - Size 4
15352 - Size 5
JAW STYLE 2
15323 - Size 2
15333 - Size 3
15343 - Size 4
15353 - Size 5

DESIGN NO.

OPTIONS

SEALS
1 - Buna-N
2 - Fluoro-Elastomer

SERIES 5360 MINIATURE HALL EFFECT SWITCHES

PART NO.	DESCRIPTION
53603-1-02	NPN (Sink) 4.5-24 VDC, 2 meter Cable
53604-1-02	PNP (Source) 4.5-24 VDC, 2 meter Cable
53623-1	NPN (Sink) 4.5-24 VDC, Quick Connect
53624-1	PNP (Source) 4.5-24 VDC, Quick Connect

See Switches and Sensors section for switch information.

NOTES:
1) Sensor must be used with a PHD Set Point Module which is ordered separately. See Switches and Sensors section for information and ordering data.
2) Proximity Switches, Bracket Kits, and Finger Blanks must be ordered separately.

CUSTOM GRIPPERS ARE AVAILABLE. PLEASE CONSULT PHD.

BENEFITS: SERIES 5300 ANGULAR OVAL GRIPPERS

BENEFITS

- Double-acting for either internal or external gripping applications.
- Optional internal springs allow the unit to be used as a single-acting gripper, for additional grip force, or for grasping an object without air pressure.
- Close tolerance jaw mechanism minimizes jaw play.
- Hardened steel pivot mechanism provides long life and low maintenance.
- Available in four sizes to cover a wide range of application requirements.
- Available with a PHD Hall Effect Sensor or with PHD Hall Effect Proximity Switches for indication of jaw position and interfacing with various controllers and logic systems.

SPECIFICATIONS	SERIES 5300
MEDIA	Lubricated Air
MINIMUM PRESSURE REQUIREMENTS	25 psi [1.5 bar] without Spring Option 40 psi [3.0 bar] with Light Spring Option 65 psi [4.5 bar] with Heavy Spring Option
MAX. PRESSURE	150 psi [10 bar] Air
JAWS	Steel
BODY	Hardcoated Aluminum
PIVOT COMPONENTS	Hardened Alloy Steel
ROD BUSHING	Hardcoated Aluminum
PISTON SEAL	Quad Type
ROD SEALS	Block Vee with Back-up Ring
PORTS	NPT [BSP]
OPTIONS	Hall Sensor, Series 5360 Switches, Spring Assist - Light or Heavy

DIMENSIONS: SERIES 5300 ANGULAR OVAL GRIPPER - JAW STYLE 1

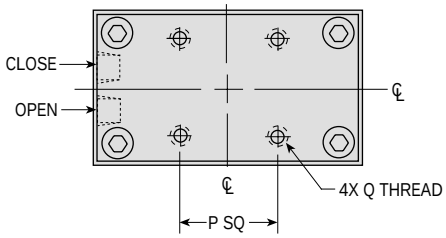

LETTER DIM	MODEL NUMBER 15320 in	15322 mm	15330 in	15332 mm	15340 in	15342 mm	15350 in	15352 mm
A*	1.812	46.0	2.500	63.5	3.500	88.9	5.125	130.2
B	1.750	44.5	2.250	57.2	2.750	69.9	4.000	101.6
D	.750	19.1	.875	22.2	1.000	25.4	1.500	38.1
F	1.500	38.1	2.000	50.8	2.750	69.9	3.500	88.9
G	#10	5	1/4	M6	5/16	M8	3/8	M10
H	1.062	27.0	1.500	38.1	2.000	50.8	2.875	73.0
K	2.438	61.9	3.390	86.1	4.587	116.5	5.734	145.6
M	.875	22.2	1.062	27.0	1.187	30.1	1.625	41.3
P	1.250	31.8	1.500	38.1	1.750	44.5	2.750	69.9
Q	10-24 x .38 DP	M5 x 0.8 x 9.7 DP	1/4-20 x .38 DP	M6 x 1 x 9.7 DP	5/16-18 x .44 DP	M8 x 1.25 x 11.2 DP	3/8-16 x .56 DP	M10 x 1.5 x 14.2 DP
R	3.063	77.8	3.749	95.2	4.312	109.5	5.875	149.2
S	.312	7.9	.438	11.1	.562	14.3	.845	21.5
T	1.156	29.4	1.687	42.8	2.375	60.3	3.250	82.6
U	2.312	58.7	3.375	85.7	4.750	120.7	6.500	165.1
V	2.843	72.2	4.031	102.4	5.531	140.5	7.531	191.3
W	1/4	M6	5/16	M8	3/8	M10	1/2	M12
X	2.126	54.0	2.952	75.0	4.025	102.2	4.859	123.4
Y	.285	7.2	.450	11.4	.598	15.2	.688	17.5
Z	1.781	45.2	2.281	57.9	2.781	70.6	4.031	102.4
AA	.688	17.5	.900	22.9	1.312	33.3	1.750	44.5
BB	10-32	M5 x 0.8	1/8 NPT	1/8 BSP	1/8 NPT	1/8 BSP	1/4 NPT	1/4 BSP
CC	.562	14.3	.750	19.1	.937	23.8	1.625	41.3
DD	.440	11.2	.500	12.7	.590	15.1	.760	19.3
EE	.125	3.2	.160	4.1	.200	5.1	.250	6.4
FF	2.810	71.4	4.000	101.6	5.500	139.7	7.500	190.5
GG	1.75	44.5	2.25	57.2	2.75	69.9	3.96	100.5

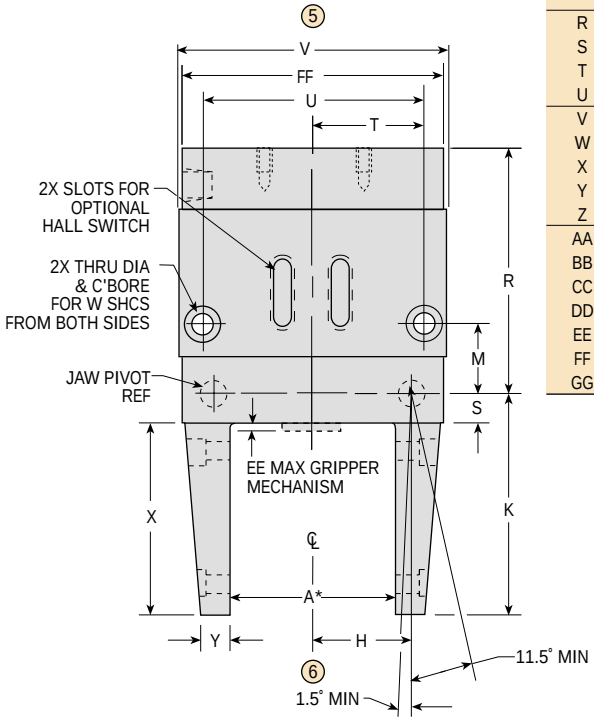

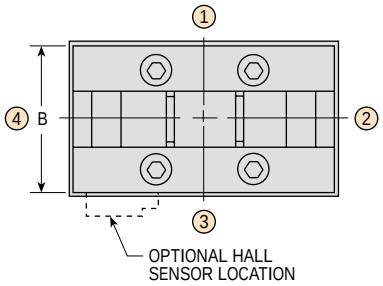

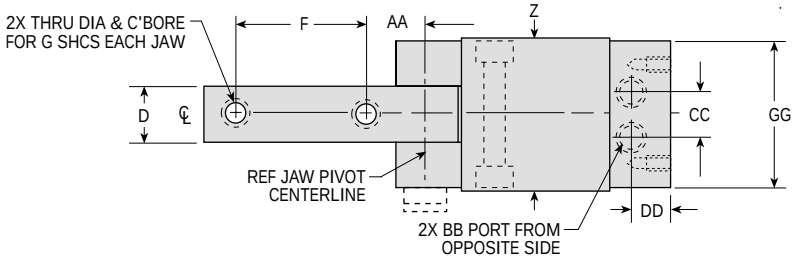

***GRIPPER JAWS:** SHOWN AT PARALLEL POSITION

JAW MOVEMENT SHOWS MINIMUM AMOUNT OF JAW ROTATION. JAWS MAY OPEN 3° OR CLOSE 3° BEYOND STATED MINIMUM ROTATION.

All dimensions are reference only unless specifically toleranced.

DIMENSIONS: SERIES 5300 ANGULAR OVAL GRIPPER - JAW STYLE 2

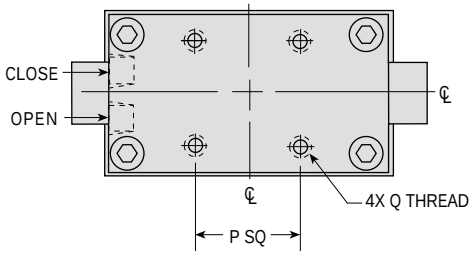

LETTER DIM	MODEL NUMBER 15321 in	15323 mm	15331 in	15333 mm	15341 in	15343 mm	15351 in	15353 mm
A*	3.937	100.0	5.000	127.0	6.236	158.4	8.610	218.7
B	1.750	44.5	2.250	57.2	2.750	69.9	4.000	101.6
D	.750	19.1	.875	22.2	1.000	25.4	1.500	38.1
E	.231	5.9	.187	4.7	.063	1.6	0.00	0.0
F	.625	15.9	.750	19.1	1.000	25.4	1.500	38.1
G	1/4-20 x .38 DP	M6 x 1 x 9.7 DP	5/16-18 x .44 DP	M8 x 1.25 x 11.2 DP	3/8-16 x .56 DP	M10 x 1.5 x 14.2 DP	1/2-13 x .75 DP	M12 x 1.75 x 19.0 DP
H	1.062	27.0	1.500	38.1	2.000	50.8	2.875	73.0
J	.906	23.0	1.000	25.4	1.118	28.4	1.430	36.3
K	.813	20.7	.968	24.6	1.200	30.5	1.680	42.7
M	.875	22.2	1.062	27.0	1.187	30.1	1.625	41.3
P	1.250	31.8	1.500	38.1	1.750	44.5	2.750	69.9
Q	10-24 x .38 DP	M5 x 0.8 x 9.7 DP	1/4-20 x .38 DP	M6 x 1 x 9.7 DP	5/16-18 x .44 DP	M8 x 1.25 x 11.2 DP	3/8-16 x .56 DP	M10 x 1.5 x 14.2 DP
R	3.063	77.8	3.749	95.2	4.312	109.5	5.875	149.2
S	.312	7.9	.438	11.1	.562	14.3	.845	21.5
T	1.156	29.4	1.687	42.8	2.375	60.3	3.250	82.6
U	2.312	58.7	3.375	85.7	4.750	120.7	6.500	165.1
V	2.843	72.2	4.031	102.4	5.531	140.5	7.531	191.3
W	1/4	M6	5/16	M8	3/8	M10	1/2	M12
X	1.125	28.6	1.375	34.9	1.700	43.2	2.430	61.7
Y	1.500	38.1	1.875	47.6	2.430	61.7	3.430	87.1
Z	1.781	45.2	2.281	57.9	2.781	70.6	4.031	102.4
AA	.062	1.6	.095	2.4	.150	3.8	.300	7.6
BB	10-32	M5 x 0.8	1/8 NPT	1/8 BSP	1/8 NPT	1/8 BSP	1/4 NPT	1/4 BSP
CC	.562	14.3	.750	19.1	.937	23.8	1.625	41.3
DD	.440	11.2	.500	12.7	.590	15.1	.760	19.3
EE	.125	3.2	.160	4.1	.200	5.1	.250	6.4
FF	2.810	71.4	4.00	101.6	5.500	139.7	7.500	190.5
GG	1.75	44.5	2.25	57.2	2.75	69.9	3.96	100.5

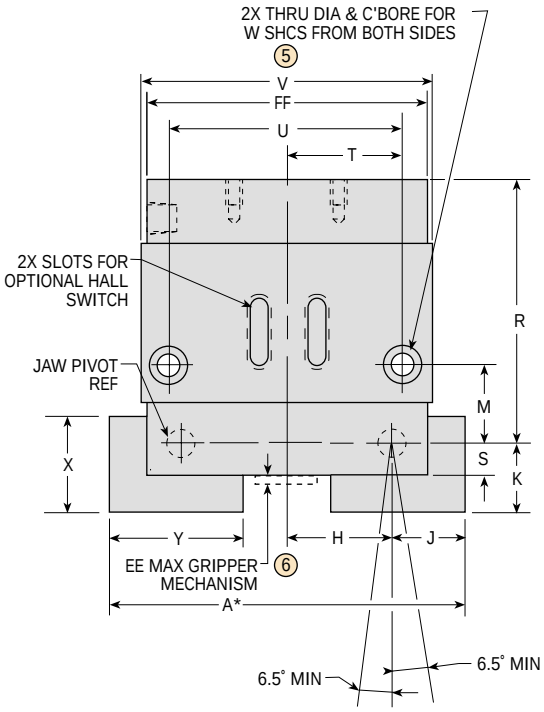

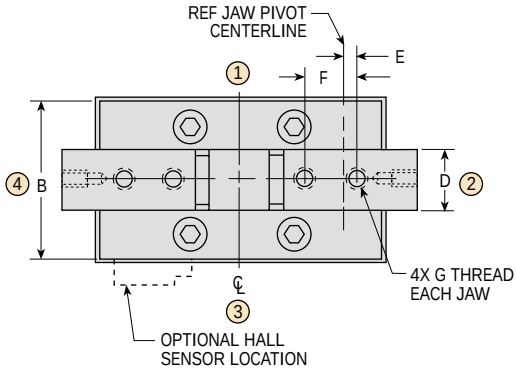

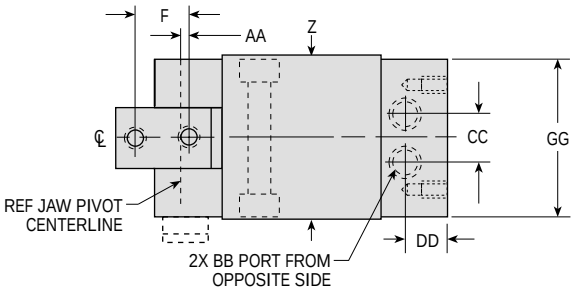

***GRIPPER JAWS:** SHOWN AT PARALLEL POSITION

JAW MOVEMENT SHOWS MINIMUM AMOUNT OF JAW ROTATION. JAWS MAY OPEN 3° OR CLOSE 3° BEYOND STATED MINIMUM ROTATION.

SPECIFICATIONS

GRIPPER NO.	DISPLACEMENT		G_F EXTERNAL GRIP		G_F INTERNAL GRIP		Sf LIGHT SPRING FORCE		Sf HEAVY SPRING FORCE	
	in^3	cm^3	IMPERIAL	METRIC	IMPERIAL	METRIC	IMPERIAL	METRIC	IMPERIAL	METRIC
1532x	.59	9.6	1.87	3058.0	2.03	3323.0	34.50	3908.0	49.50	5582.0
1533x	1.78	29.2	5.56	9085.0	6.08	9938.0	93.00	10518.0	157.50	17751.0
1534x	4.29	70.3	14.14	23109.0	14.85	24255.0	221.00	24968.0	366.50	41318.0
1535x	12.66	207.5	41.85	68355.0	43.70	71382.0	590.00	66492.0	1275.00	143796.0

NOTE: Maximum load that grippers can handle will vary based on: Size of part being picked up, shape of part, texture of part, speed at which part is transferred, working pressure, shape of fingers, etc. PHD recommends that the fingers of jaws be tooled or machined to conform to the shape of the part being gripped.

GRIPPER NO.	UNIT WEIGHT					
	STANDARD		SPRING ASSIST			
			LIGHT		HEAVY	
	lb	kg	lb	kg	lb	kg
1532x	2.40	1.08	2.5	1.11	2.5	1.12
1533x	4.87	2.2	5.0	2.28	5.1	2.32
1534x	9.58	4.35	10.0	4.53	10.2	4.63
1535x	27.73	12.57	29.5	13.37	29.8	13.53

DOUBLE ACTING
Without Springs

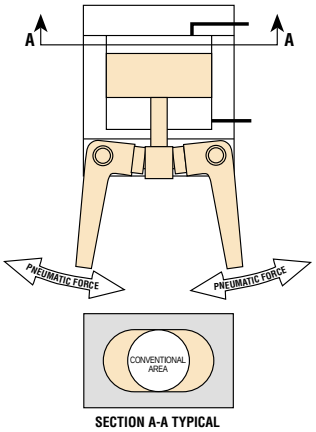

SECTION A-A TYPICAL

SINGLE ACTING
With Spring Close or Spring Open

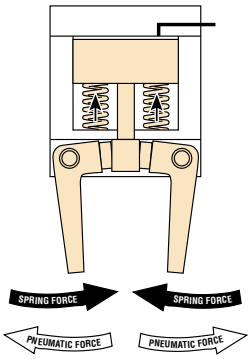

Guards against failure due to unforeseen pneumatic pressure loss.

DOUBLE ACTING
With Spring Assist Open or Close

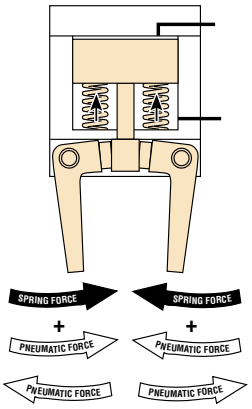

Provides up to four times the gripping force of conventional grippers of the same size.

GRIP FORCE EQUATIONS:

1. All Grippers are double acting.

2. To calculate grip force on units without springs, complete the appropriate equation, but leave out the Spring Force (Sf).

$$\text{FORCE (lb)} = \frac{\text{PRESSURE (psi)} \times G_F}{\text{DISTANCE FROM JAW PIVOT (in)}}$$

$$\text{FORCE [N]} = \frac{\text{PRESSURE [bar]} \times G_F}{\text{DISTANCE FROM JAW PIVOT [mm]}}$$

3. To calculate grip force on units with springs, complete the appropriate equation, including Sf. Add Sf if the springs are working with applied pressure.

$$\text{FORCE (lb)} = \frac{[\text{PRESSURE (psi)} \times G_F] + Sf}{\text{DISTANCE FROM JAW PIVOT (in)}}$$

$$\text{FORCE (N)} = \frac{[\text{PRESSURE (bar)} \times G_F] + Sf}{\text{DISTANCE FROM JAW PIVOT [mm]}}$$

3. (continued)
Subtract Sf if the springs are working against applied pressure.

$$\text{FORCE (lb)} = \frac{[\text{PRESSURE (psi)} \times G_F] - Sf}{\text{DISTANCE FROM JAW PIVOT (in)}}$$

$$\text{FORCE [N]} = \frac{[\text{PRESSURE (bar)} \times G_F] - Sf}{\text{DISTANCE FROM JAW PIVOT [mm]}}$$

NOTE: Gripping force is defined as the maximum value at which the jaws will not move from their gripping position. The above figures are based on actual measured results; figures may vary slightly due to friction. Gripping force is proportional to input pressure.

SEALS AND FLUIDS

Buna-N seals are standard on all Series 5300 gripper piston, rod, and bushing seals. Neoprene seals are used on the gripping mechanism. Piston and rod seals are wear compensating quad type seals. These seals are compatible with standard paraffin-based hydraulic fluids used for lubrication of air cylinders or as power source for hydraulic actuators. Fluoro-Elastomer seals in place of the Buna-N are optional for various types of hydraulic fluids.

TEMPERATURE LIMITS

Seals and gripping mechanism are designed for use in temperatures from –20° to 180°F [–30° to 82°C].

BACKLASH

Backlash of gripper jaw will be less than 0.2° initially, per jaw.

REPEATABILITY

Grip repeatability is within .002 inch [0.05 mm] of original centered position.

LIFE EXPECTANCY

Five million trouble-free cycles can be expected under normal working conditions. Life can be extended by relubricating ball and socket joint after five million cycles. Backlash after twenty million cycles should be no more than 1°.

MATERIAL

Gripper body is made of hardcoated aluminum. Jaw housings are anodized aluminum and the jaws are high strength steel. All internal jaw mechanisms are manufactured from alloy steel.

SPECIAL UNITS

For grippers for special applications, severe duty, or special material, consult PHD.

3 4 SENSOR/TRANSDUCER

PHD offers a solid-state sensor transducer option –3 along with a set point module for sensing four or more positions throughout the jaw travel. The set point module allows independent adjustment of each sensing position and is available for 4.5 to 24 VDC NPN or PNP.

SET POINT MODULE

PART NO.	DESCRIPTION
9800-01-0300	4.5-24 VDC, Sink Type Output
9800-01-0400	4.5-24 VDC, Source Type Output

See Switches and Sensors section for information.

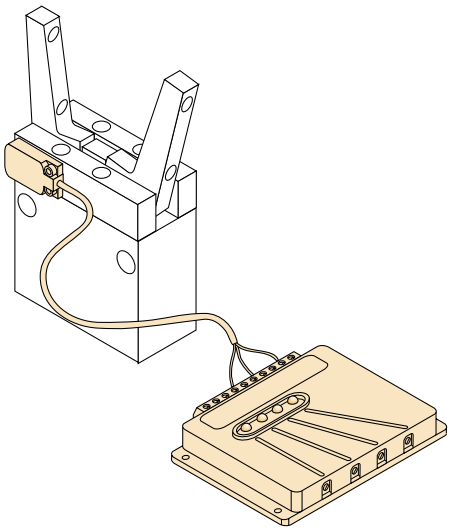

7 HALL EFFECT MAGNET

Equips piston with magnets and “T” slot on body for Series 5360 Switches.

NOTES