Non Proportional Pressure Control system. **Multi-Pressure Pak® (MPP)**

OPERATIONAL BENEFITS

1. Fast response.
2. Long life.
3. High flow.
4. The use of a digital command signal brings easy installation and use.
5. A compact and lightweight unit saves room and installation costs.
6. This system is the alternative to proportional valves if more than six pressures or closed loop feedback are not required.
7. The Multi-Pressure Pak® is easy to set up and maintain.
8. For 2, 3 or 4 ported weld guns and other applications.
9. Accuracy of ± 2.5 % of full scale

DESIGN DESCRIPTION

The MAC Multi-Pressure Pak® is designed for applications requiring multiple pressures which can be selected electrically through low powered AC or DC solenoids. The selected pilot pressure is directed to a pilot operated sandwich pressure regulator. The sandwich regulator amplifies the flow of this pre-selected pressure.
The multiple pressures can be manually preset from 25 to 120 PSI (1.7 to 8 BAR).
The Multi-Pressure Pak® is pre-wired, pre-piped, lightweight and compact.
The optional quick exhaust valve allows for quick close on 3 ported weld guns.

COMPONENTS

A typical Multi-Pressure Pak® is made of the following components :

- one cascading manifold with regulators and solenoid valves for the pressure selection.(up to six (6))
- one (or more) directional valves to be selected as a function of the flow required.
- one air pilot operated pressure regulator for main pressure control.
- one optional quick exhaust valve.

FIELDS OF APPLICATION

The Multi-Pressure Pak® is suitable for all applications requiring up to six different pre-determined pressures.
The numerous possibilities of flows and pressure ranges makes it easy to find the best appropriate configuration.

This system has proven its abilities in the automotive industry, for the fast and accurate control of spot welding. The lightweight and compact size of this assembly makes it ideally suited for robot arm mounting. Many other applications are satisfied, such as pressure selection for any supply network or machinery, force control in a cylinder, ...

Consult "Precautions" page 94 before use, installation or service of MAC Valves.

Series **MPP**

100% OF PRODUCTION TESTED 100%

WARRANTY 18 MONTHS

TECHNICAL DATA

Min. supply pressure :	25 PSI (1.7 BAR)
Max. supply pressure :	150 PSI (10 BAR)
Pressure output range :	25-120 PSI (1.7 to 8 BAR)
Voltages available AC :	120/60, 110/50
DC :	12 & 24 volt. 1.8 to 12.7 watts
Other AC and DC voltages available :	Consult factory
Air supply :	40 micron filtration
Lubrication :	Not required but if lubrication is used, a medium aniline point oil is recommended

NOTE: Pressures shown are minimum and maximum safe working pressures.

*Series	Port size	Flow
82	1/4" - 3/8"	C_V0.9 / 900 Nl/Min
93	3/8" - 1/2"	C_V2.4 / 2400 Nl/Min
6300	3/8" - 1/2"	C_V2.1 / 2100 Nl/Min
6500	1/2" - 3/4"	C_V3.5 / 3500 Nl/Min
ISO 1	1/4" - 3/8"	C_V1.1 / 1100 Nl/Min
ISO 2	3/8" - 1/2"	C_V2.1 / 2100 Nl/Min
ISO 3	1/2" - 3/4"	C_V5.0 / 5000 Nl/Min

* Other valve series may be available - consult factory.

REQUIREMENTS FOR APPLICATION

First determine the Flow or Cv required for the application and then select the appropriate valve series from the table above.
Refer to the MAC® Catalog for valve designation, voltage options and cylinder port configuration or size.
Determine the number of pressures required by the application.
For welding applications, state if for 2, 3 or 4 ported gun.
Indicate whether any other valves are to be ganged to the Multi-Pressure Pak® (for example a standard 4 way valve to operate a tool changer or tip dresser).
External electrical conduit connections can be supplied (consult factory) for ordering purposes.
MAC® Valves will then provide a MPP (Multi-Pressure Pak®) number to this particular configuration.

Consult "Precautions" page 94 before use, installation or service of MAC Valves.

OPERATIONAL DESCRIPTION

The Multi-Pressure Pak® consists of:
- A 4 way solenoid valve (B) (i.e. ISO 2, 6300, etc…)
- A pilot operated sandwich regulator (C) mounted on a manifold add-a-unit base (F).
- 35 Series, solenoid valves (H), each with its own individual 92 Series regulator (A), are mounted to the side of the cascading manifold adaptater. The adaptater has a common outlet (G) connected to the air pilot port (D) of the sandwich air pilot regulator (C). The inlet pressure to the manifold adaptater is supplied thru the sandwich regulator block.

The number of pressures supplied by this assembly corresponds to the number of 92 Series regulators (A). NOTE: Up to six regulators are possible. The optional quick exhaust valve (E) is available to provide a "quick close" on 3 ported weld guns.

Once the pressure at each individual 92 Series regulator has been manually preset, energizing the corresponding 35 Series solenoid will provide that particular pressure at the common outlet of the manifold. The pre-selected pressure at the common outlet is connected to the air pilot of the sandwich regulator. The sandwich regulator amplifies the flow of this pre-selected pressure either to both cylinder ports of the 4 way valve or to one cylinder port with main line pressure fed through a bypass plate to the other cylinder port.

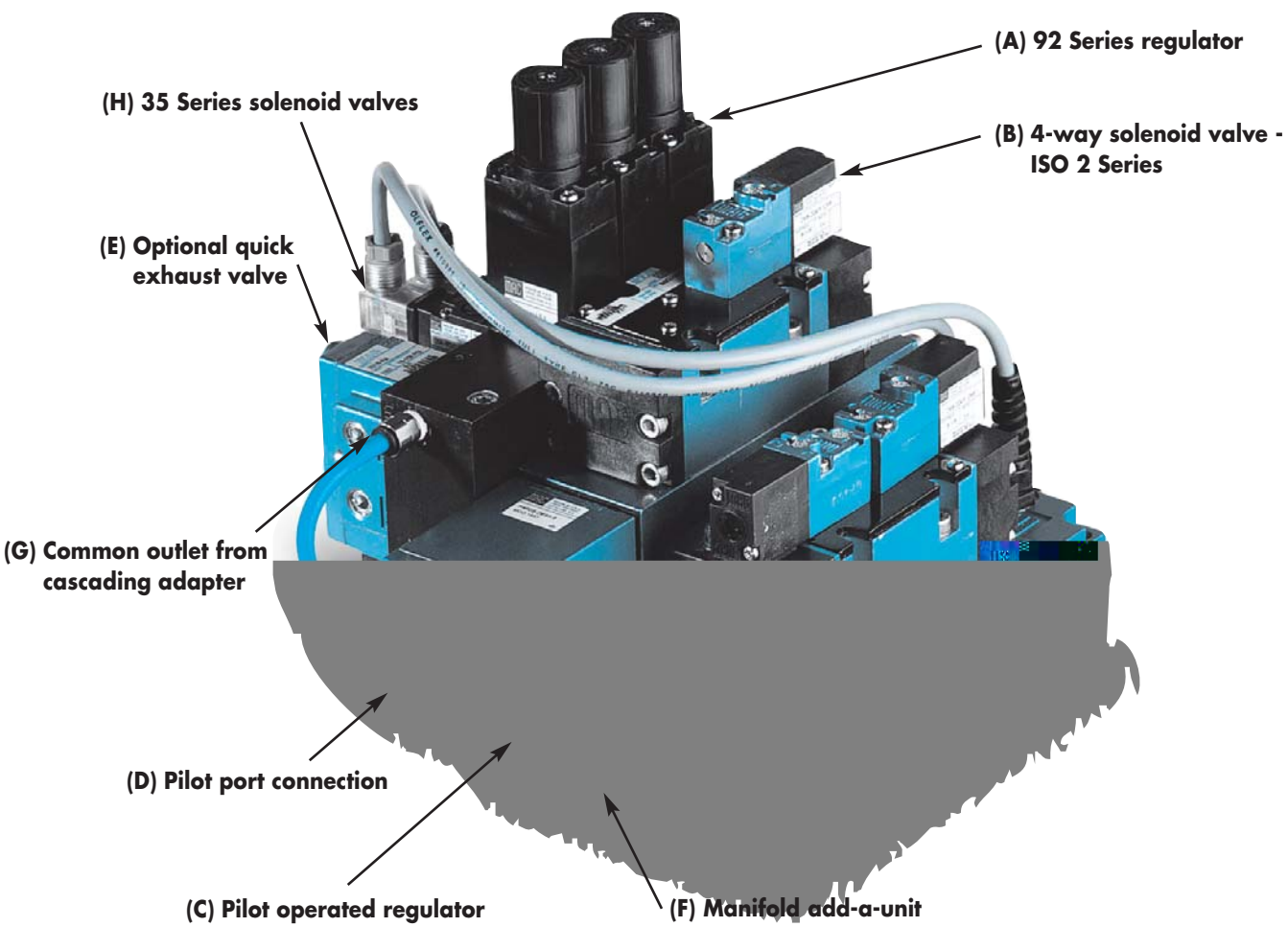

Consult "Precautions" page 94 before use, installation or service of MAC Valves.